SUMMERSET
PROFESSIONAL GRILLS

33" 2-Drawer & Vented LP Tank Pullout Drawer Combo

Model	**SSDC2-33LP**
Cutout Dimensions*	W30 1/2" X H19 1/2" X D20 3/4"
Overall Dimensions**	W32 7/8" X H22" X D20 1/2"

#304 North American Stainless Steel Construction

1/2" Return on Flange

Easy Glide Rail System w/ Soft Closure Feature

Double Lined for Extra Insulation

*** Manufacturer Suggested Cutout Dimensions**

**** Manufacturer Approximate Overall Dimensions**

NOTES

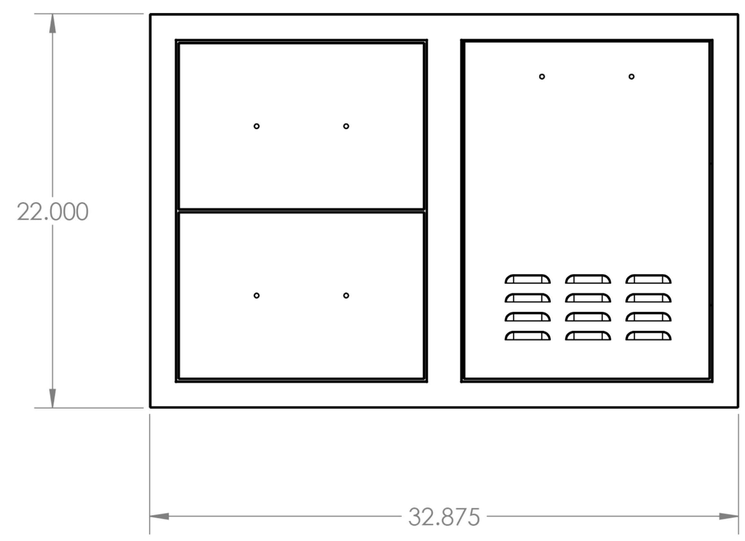

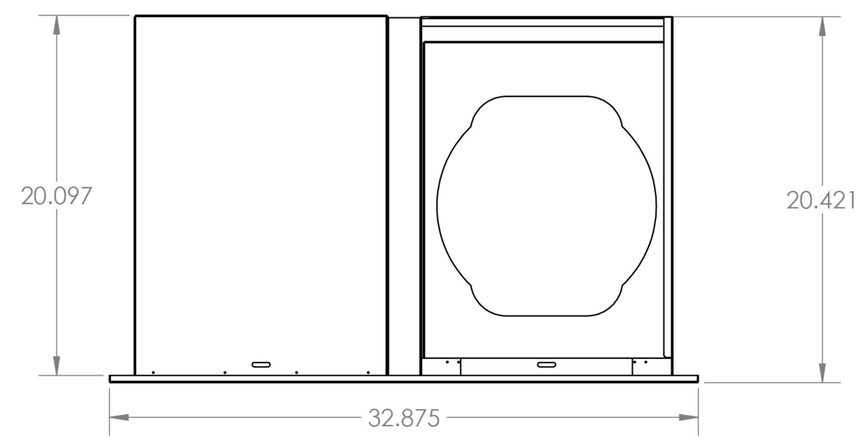

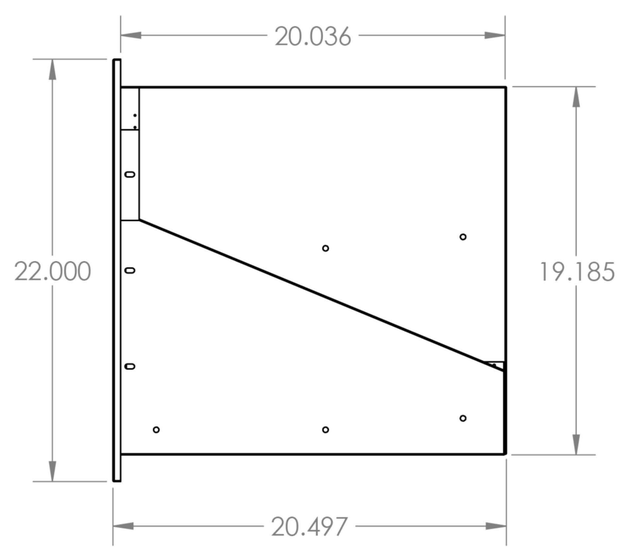

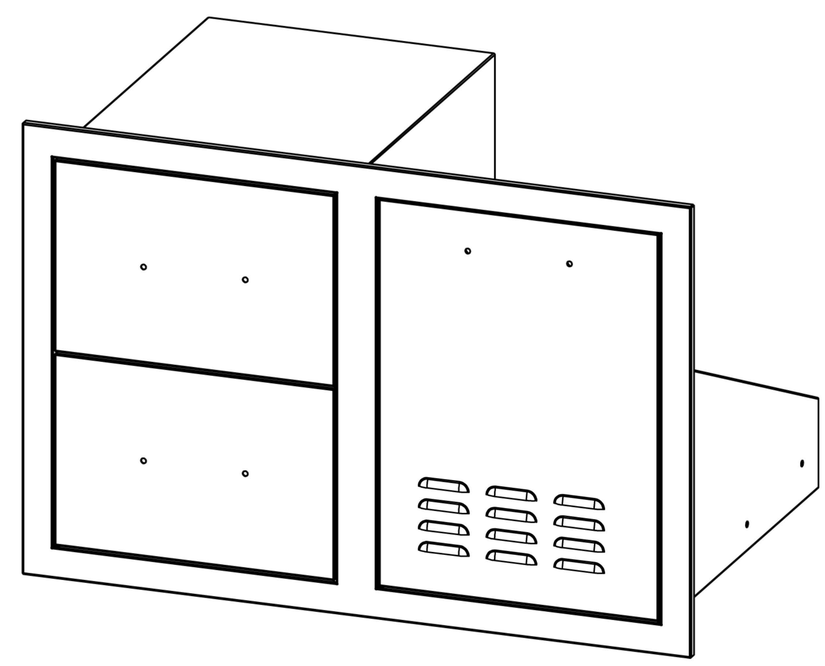

Suggested Cutout Dimensions*

(W) 30 1/2" x (H) 19 1/2" x (D) 20 3/4"

Island Front View

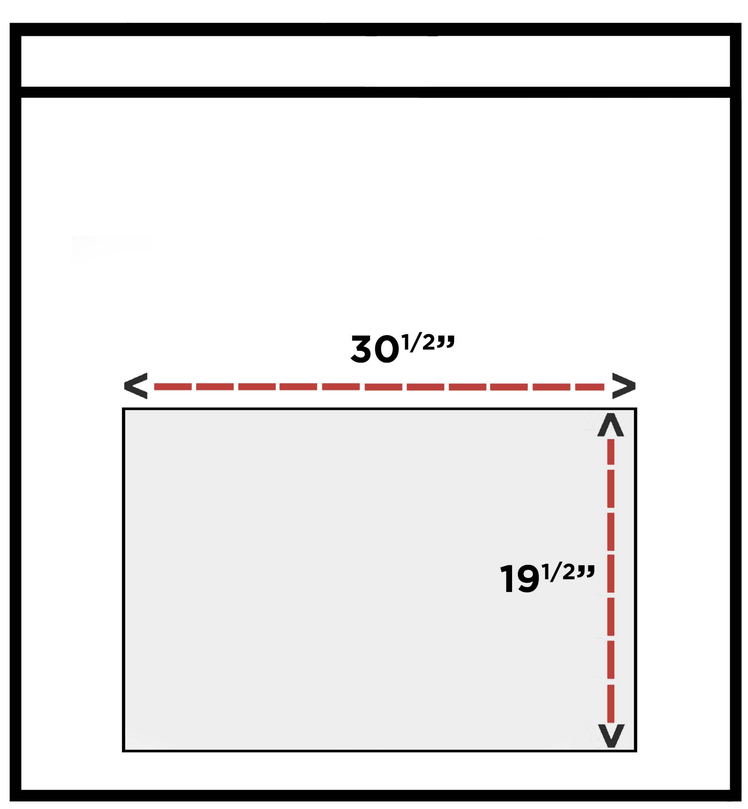
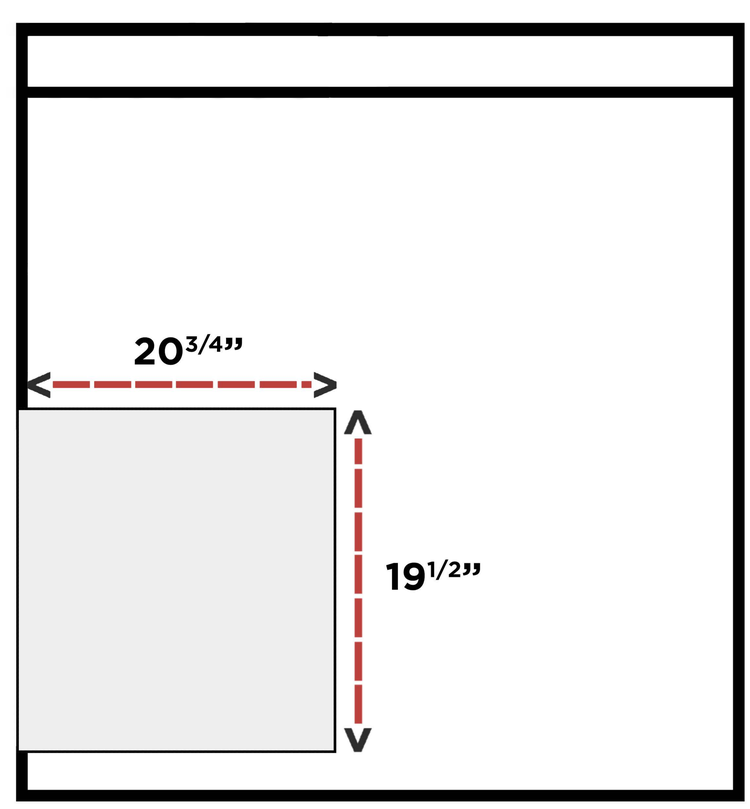
Island Side View