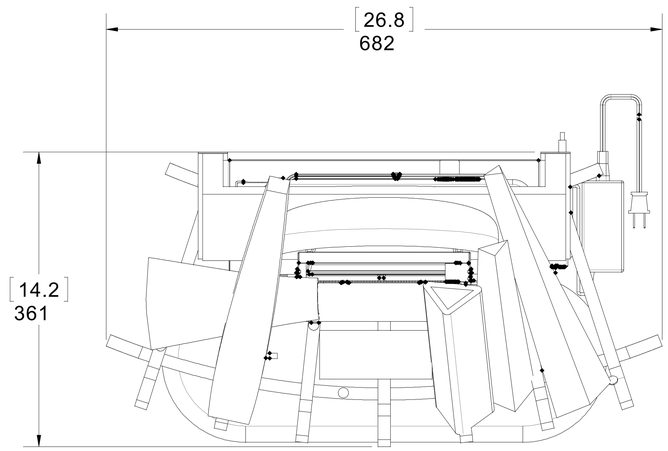

Clearance Above Logs

The mist rises to approx. 20" above the logs.
We recommend 24" clearance for visual appeal.

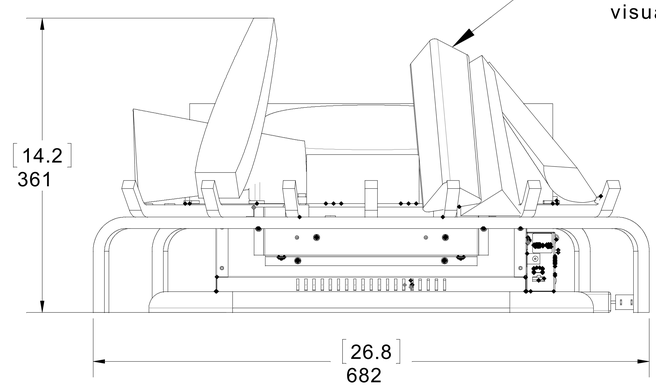

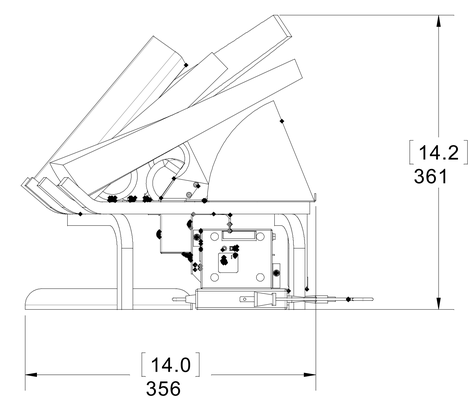

DLGM29

Dimplex
North America Limited